Schematic of EVAL_DRIVE_3PH_PFD7 board

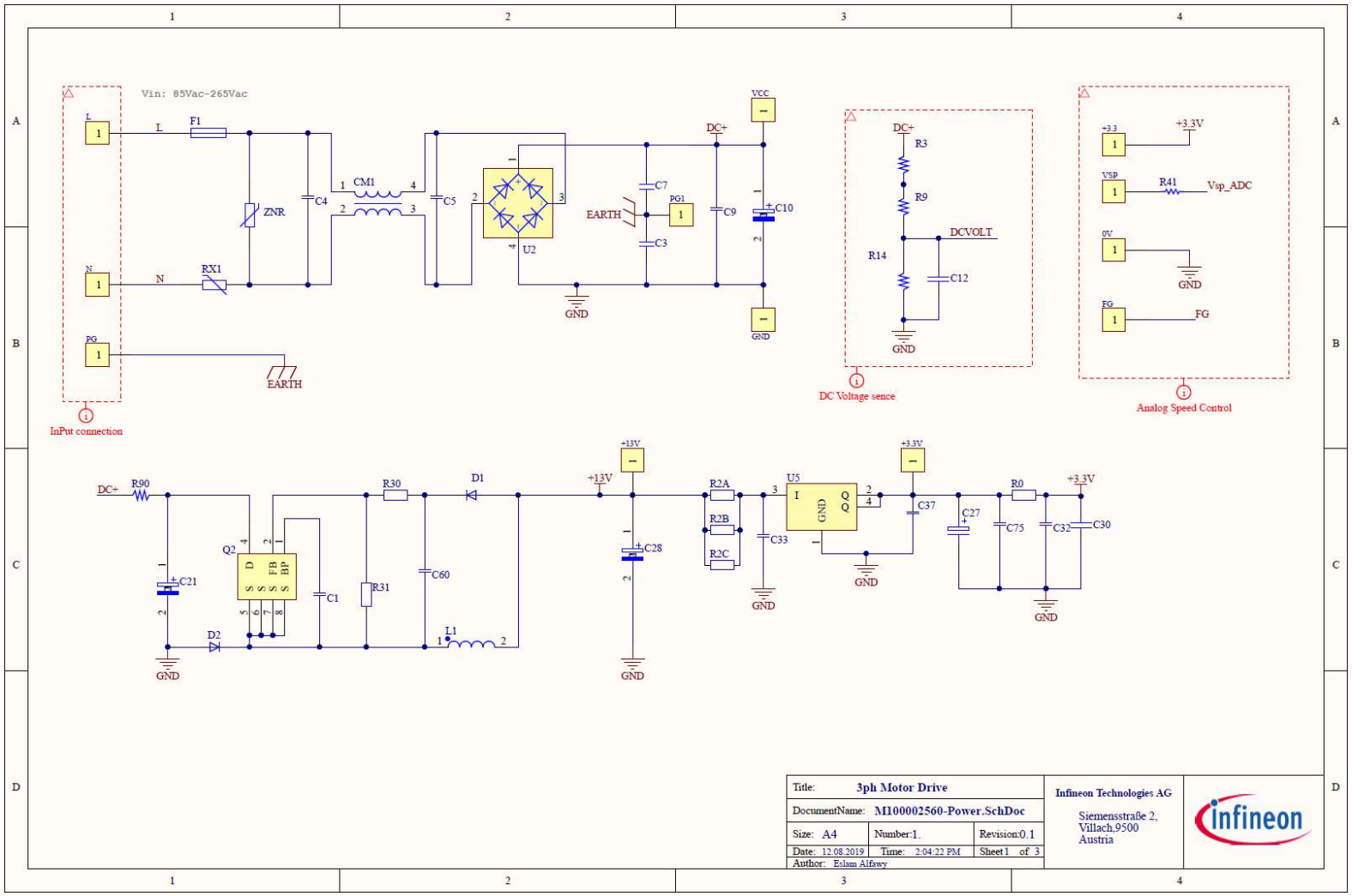

Copyright © Infineon Technologies AG 2017. All rights reserved.

Schematic of EVAL_DRIVE_3PH_PFD7 board

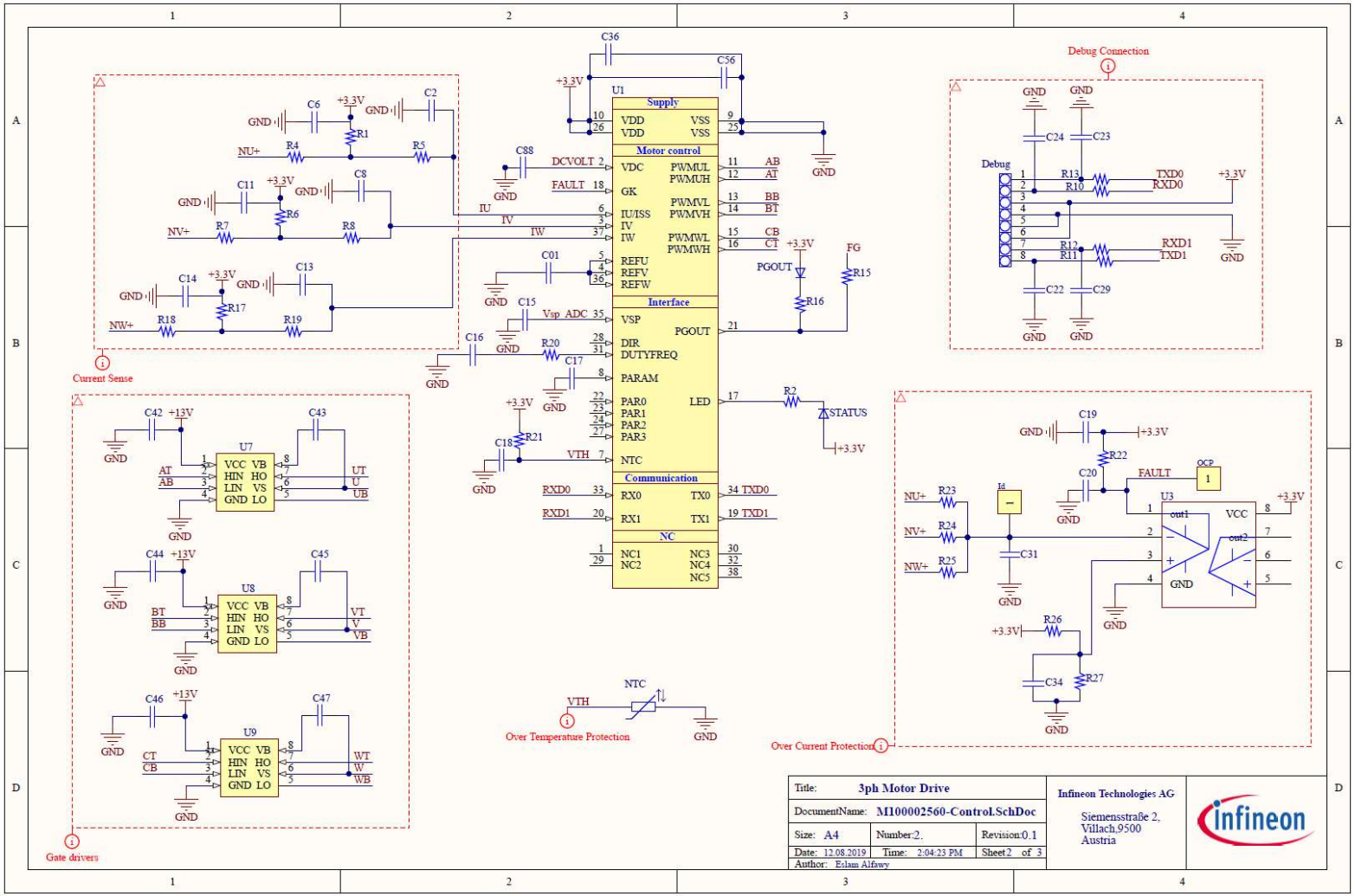

Copyright © Infineon Technologies AG 2017. All rights reserved.

Schematic of EVAL_DRIVE_3PH_PFD7 board

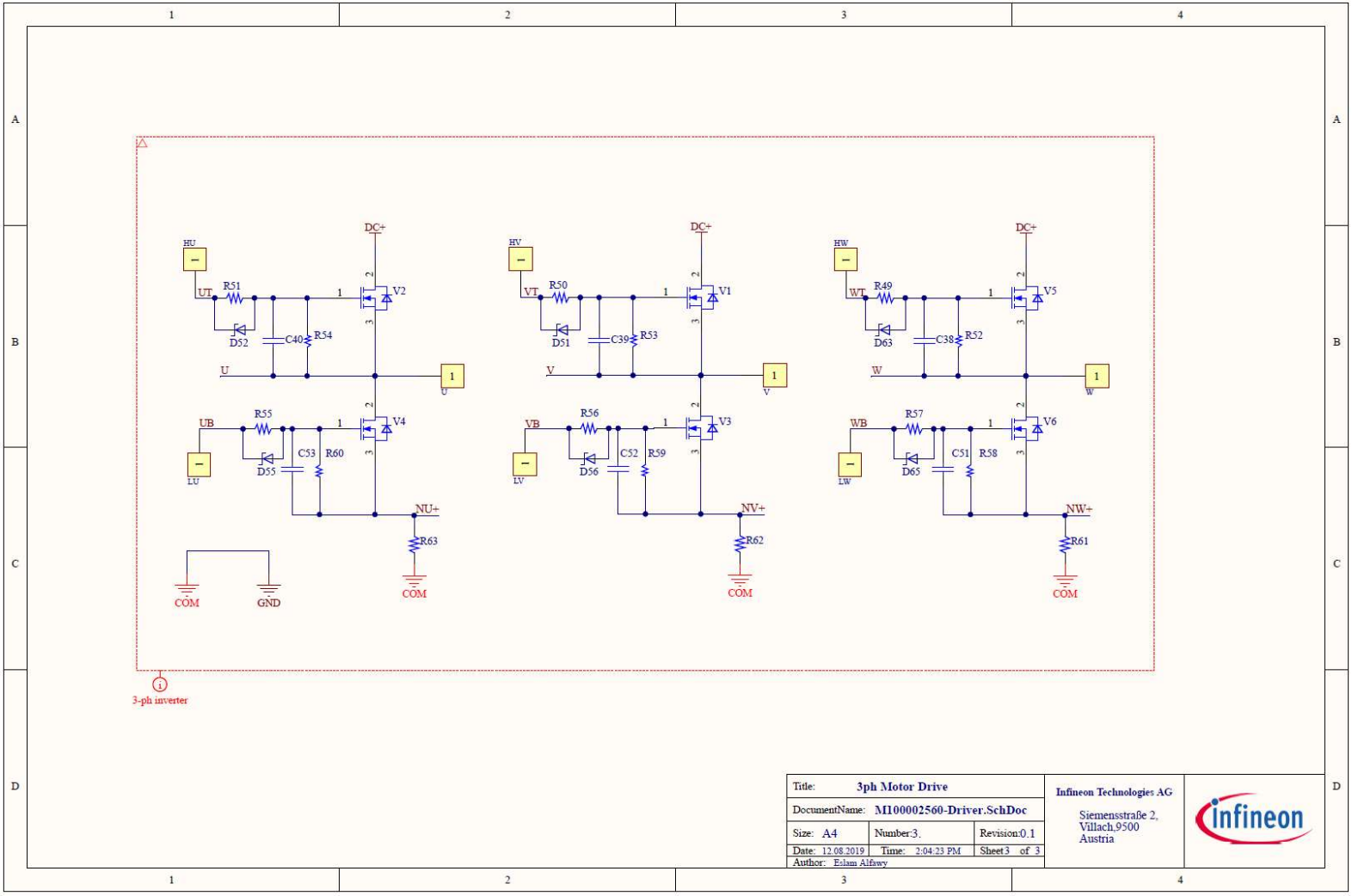

Copyright © Infineon Technologies AG 2017. All rights reserved.